GRAPHS, NETWORKS AND SIX DEGREES

Peter Dankelmann

University of Johannesburg

GRAPHS IN EVERYDAY LIFE

Historical background

The development of mathematics has always been driven by needs of the societies of the day. In ancient times, the need to measure and predict seasonal events such as the cycles of the moon, the seasons, or recurring floods lead to the development and advancement of astronomy. Architecture required geometry, and increased exploration required advances in navigation, which were made possible through increased knowledge of trigonometry. During the middle ages, increased trade between distant locations required methods for easy currency conversion, which in turn led to advances in arithmetic and algebra. Arabic numerals, which replaced the Roman numerals, had the advantage of much easier arithmetic manipulation. For example the simple multiplication

XII times XIX = CCXXVIII

requires significantly more complicated procedures than the same problem, written in Arabic numerals

12 times 19 = 228.

This was undoubtedly a factor in the rapid replacement of Roman numerals by Arabic numerals.

Over the next centuries, much of mathematics was concerned with problems arising in mechanics and physics. Differential and integral calculus arose from mechanical problems, rather than from purely mathematical considerations. From an increasingly systematic study of chance in gambling, a mathematical theory of probability emerged.

The first half of the 20th century brought a development of new areas like linear programming, with the hope that it could increase efficiency of industrial and military processes, and game theory which models the situations in which players each choose between different options, and depending on the choices made by all players, a reward or penalty is determined for each player.

With the advent of computers, there was an increasing need to develop a theory of networks that link objects such as computers, and the links between them. Graph theory filled this gap. The first book on graph theory, written by the Hungarian Denes König, appeared in 1936, and since then there has been a rapid development of this field.

Dankelmann, P. (2013). Graphs, networks and six degrees. In Z. Davis & S. Jaffer (Eds.), Proceedings of the 19th Annual Congress of the Association for Mathematics Education of South Africa, Vol. 1. (pp. 19 – 34). Cape Town: AMESA.

Over the past decades there has been a realisation of the fact that many aspects of our lives are governed by networks, such as social networks, computer networks, and cell phone networks, which are governed by similar principles. In the following sections we explore some aspects of graph theory and networks, some of its many applications, and its possible place within mathematics education.

What is a graph?

We give two definitions of a graph, first the definition that is generally used in practice and that allows us to visualise graphs, and later we give the abstract definition.

Definition: *A graph consists of points in the plane, and lines joining some of the points. The points are called vertices, and the lines edges.*

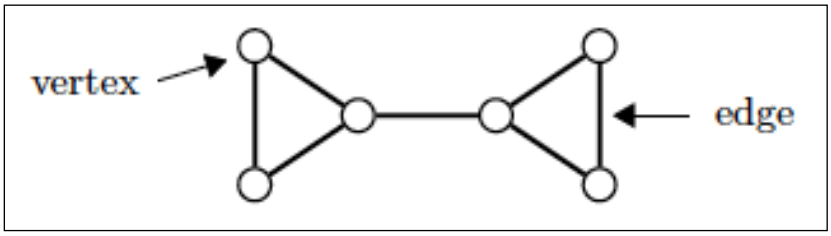

Figure 1: A graph with six vertices and seven edges.

It is important to note from the start that the graphs of functions, for example the graph of are not considered in graph theory. It is a historical coincidence that these objects share the same name.

Graphs appear in science, technology and in our daily lives in many disguises. Here are a few examples:

- *maps* with cities (the vertices) and streets (the edges) linking them,
- *transportation networks* such as Gautrain or London Underground with stations (the vertices) and direct rail links (the edges) linking them,
- *molecular diagrams* with atoms (the vertices) and bonds (the edges),
- *social networks* with people (the vertices) and relationships such as friendships, common interests, or communication during a certain time period (the edges) linking them,
- *friendship graphs* are an example of social networks, with people (the vertices) and friendships (the edges) linking them,
- *the world wide web* with web pages (the vertices) and hyperlinks (the edges),
- *economic networks* with banks (the vertices) and relationships of lending funds (the edges).

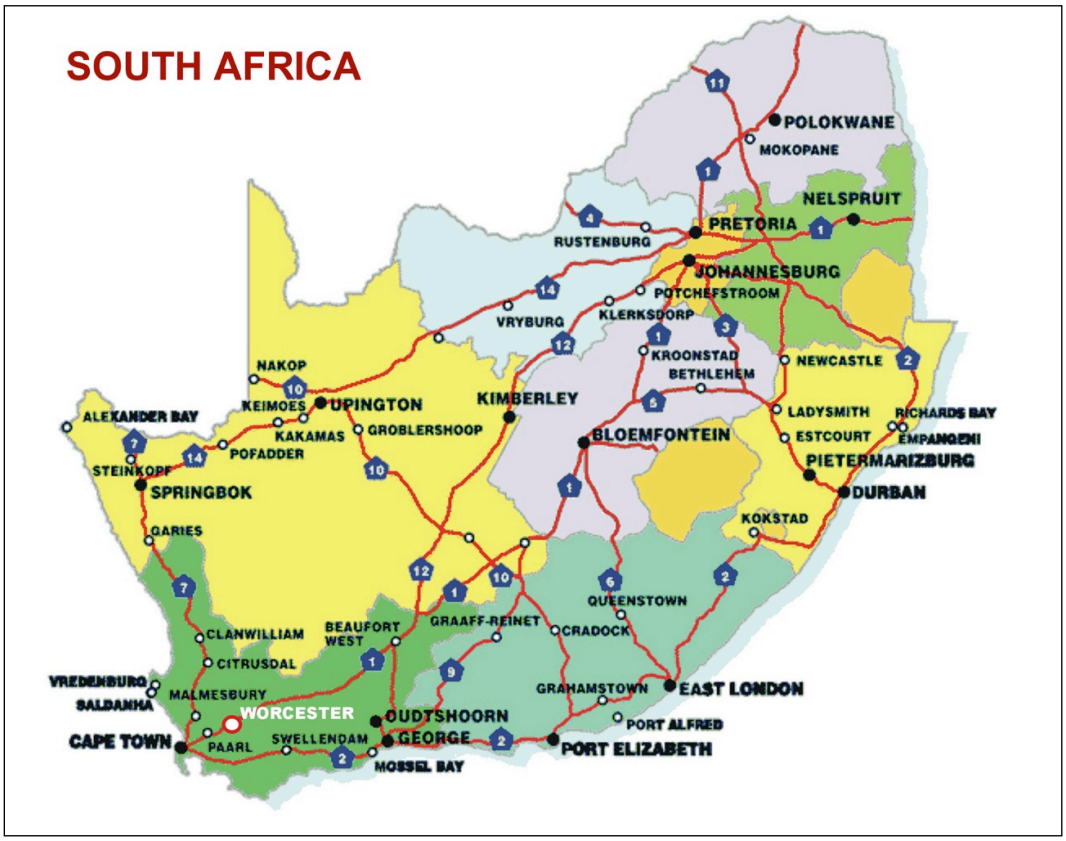

Figure 2: The SA roadmap is a graph.

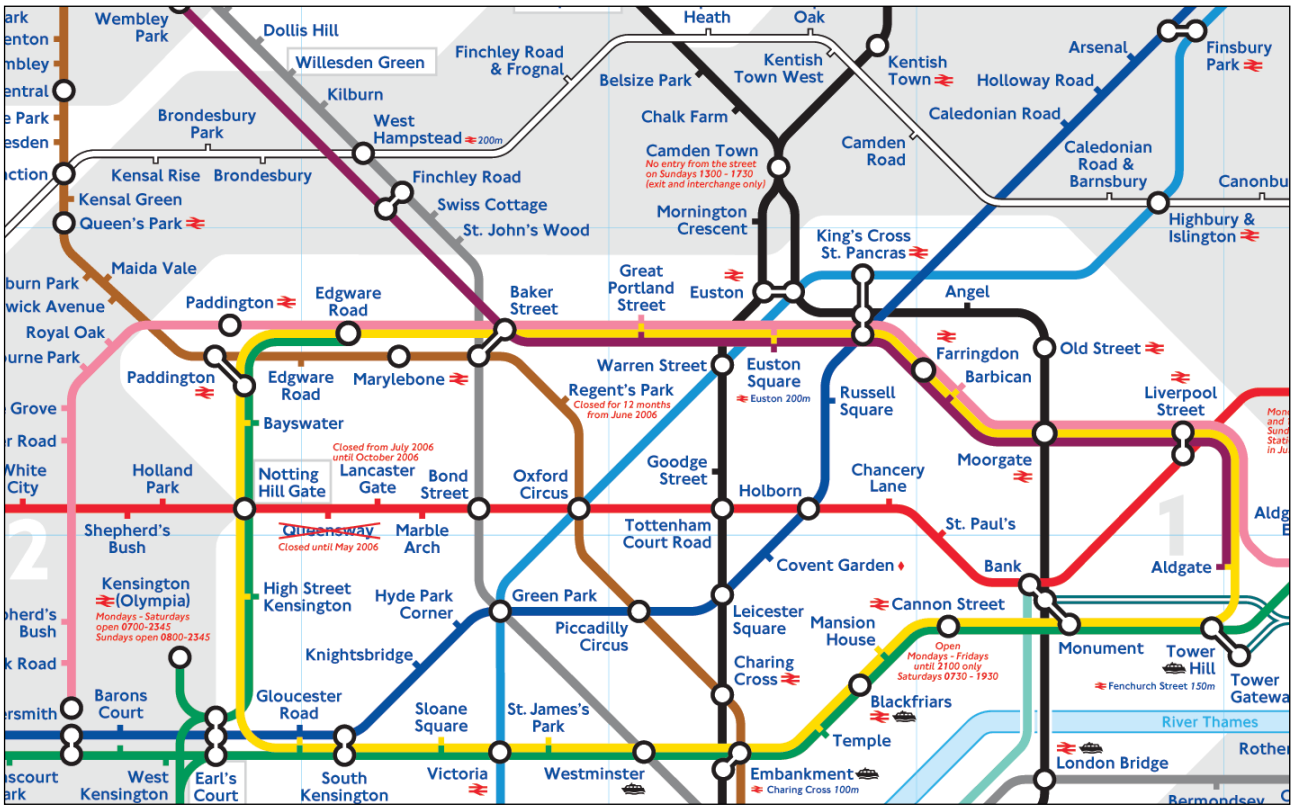

Figure 3: The London Underground is a graph.

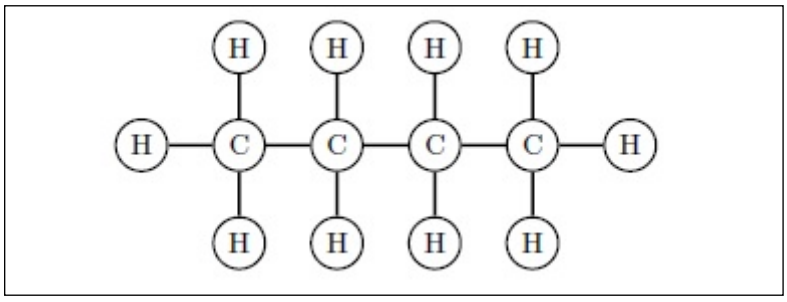

Figure 4: The structural formula for butane is a graph.

For the record we give the abstract definition, although we won't use it in this form.

Definition: *A graph G consists of two sets: a set V, whose elements are the vertices of G, and a set E of two element subsets of V, called the edges of G.*

Sometimes the edges in a graph have directions, similar to a street that can be a one-way street. In this case the graphs are called directed graphs or digraphs. We restrict ourselves here to graphs in which the edges have no direction, so they link their two ends both ways.

We need a further term from graph theory.

Definition: *Let G be a graph and u and v distinct vertices of G. If there is an edge joining u and v, then we say that u and v are adjacent, or neighbours, in G. The edge joining u and v is denoted by uv.*

BASIC GRAPH THEORY: DISTANCES

Definition of the distance

The following two definitions aim to capture how far two given vertices are apart from each other in a graph. Informally, the distance between two vertices is the minimum number of "hops" along edges one needs to get from one vertex to the other, and a sequence of hops is called a path. The formal definitions are as follows.

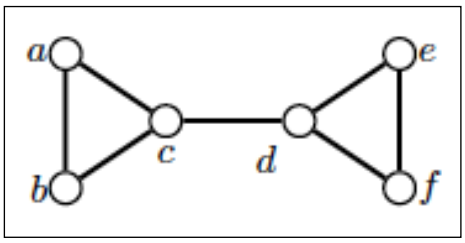

Figure 5: A shortest *a*-*e* path: *a*, *c*, *d*, *e*.

Definition: *Let G be a graph. A path in G is a sequence of vertices, such that each vertex in the sequence is adjacent to the next one. A path whose first vertex is u and whose last vertex is v is called a u-v path. The length of a path* $v_1, v_2, \ldots, v_k$ *is k.*

Definition: *Let u and v be vertices of a graph G. The distance between u and v is the smallest of the lengths of all u-v paths in G.*

For example in the graph in Figure 5, a possible *a*-*e* path is from *a, b, c, d, e*. Its length is four. A shorter *a*-*e* path, of length three, is *a*, *c*, *d*, *e*.

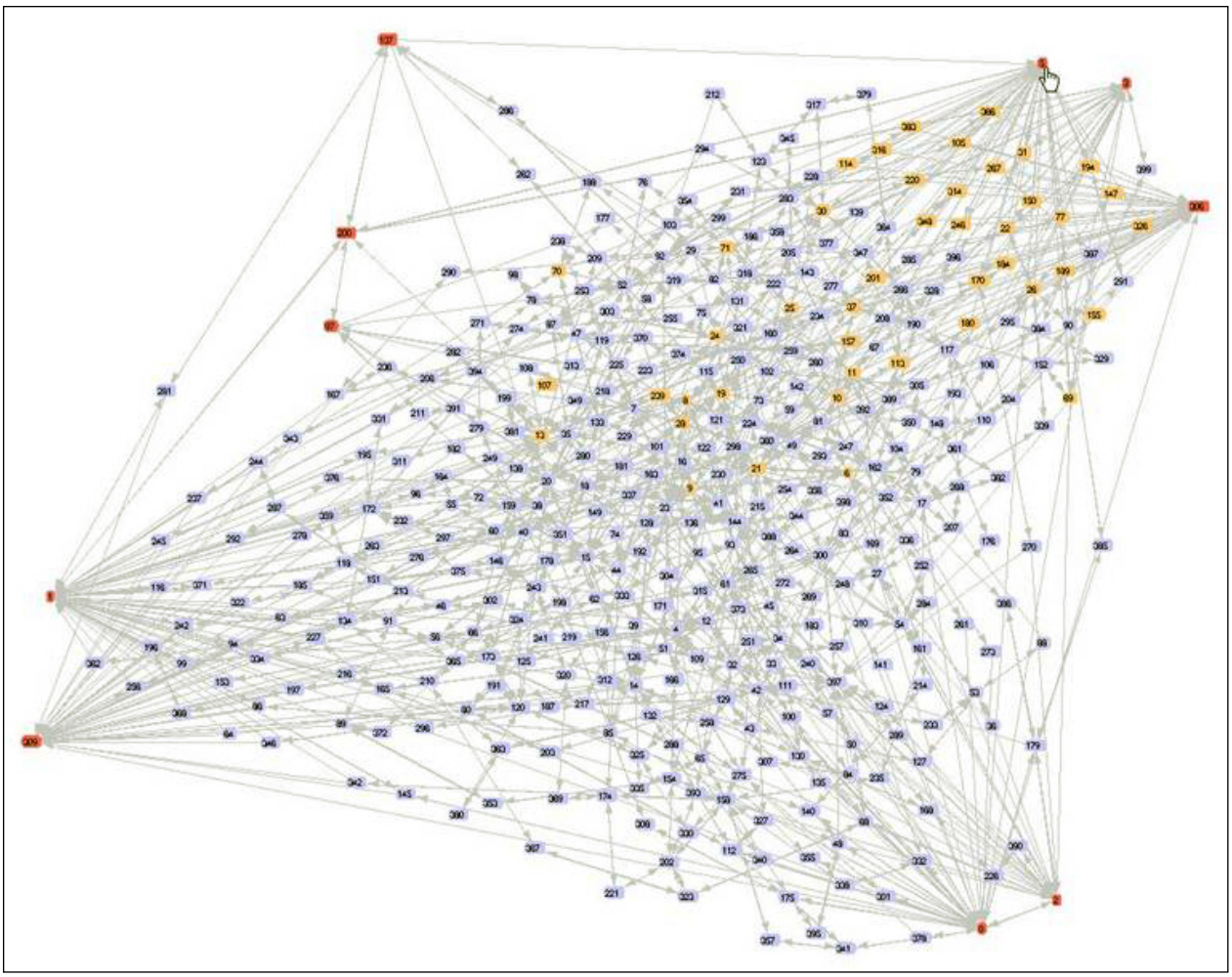

Figure 6: Phone calls within a group during a ten day period.

Depending on what a graph represents, the distance between two vertices *u* and *v* can have different meanings. For example if *G* represents a transportation network then the distance between *u* and *v* tells us how many intermediate stops are necessary if one travels from *u* to *v*, friendship graph then the distance between *u* and *v* indicates how far socially apart *u* and *v* are. For example if *u* and *v* have distance 1, they are friends. If their distance is 2, then they are not friends, but they have a friend in common. If the distance is 3, then neither are they friends, nor have they a friend in common, but some friend of *u* and some friend of *v* are friends, and so on, internet graph then the distance between *u* and *v* indicates how many clicks one needs to get from web page *u* to web page *v*, financial graph then the distance between *u* and *v* indicates how much a failure of one bank would expose the other bank to risk.

In mathematical circles a well-known distance is the so-called Erdös number. Paul Erdös was one of the most prolific researchers in mathematics of all time and one of the greatest mathematicians of the 20th century. He travelled throughout his life to collaborate with several hundred other mathematicians. The Erdös number of a

mathematician is defined as follows. Erdös himself has Erdös number 0. Everybody who has co-authored a paper with Erdös has Erdös number 1. Everybody who has not co-authored a paper with Erdös, but has co-authored a paper with someone whose Erdös number is 1, has Erdös number 2, and so on. Mathematically speaking, the Erdös number of a mathematician is the distance of his vertex to Erdös in the collaboration graph, in which the vertices stand for the mathematicians, past and present, and two vertices are adjacent if their mathematicians have co-authored a paper.

A light-hearted Hollywood variant of the Erdös number is the Bacon number, named after the actor Kevin Bacon. It is defined analogously to the Erdös number. The actor Kevin Bacon has a Bacon number of 0. Every actor who has appeared in a movie together with Kevin Bacon has Bacon number 1, and so on. While some few actors cannot be linked to Kevin Bacon at all, most Bacon numbers are remarkably small. For example Elvis Presley has a Bacon number of 2, and the cricketer Tendulkar's Bacon number is 3. The largest reported Bacon number is 9. The popularity of this concept is shown by the fact that the Google search engine has a feature to determine the Bacon number of actors by typing in the search field "Bacon number" followed by the name of the actor in question.

If a graph is connected, that is, if between any two vertices there is a path in the graph, then important information on the distances is captured in the largest of the distances.

Definition: *Let G be a graph. The largest of the distances between all pairs of vertices is the diameter of G.*

For example the graph in Figure 5 has diameter 3. This can be verified by checking the distances between all pairs of vertices. None of them is greater than 3, but there are distances (for example the distance between *a* and *e*) that equal 3.

Computing Distances

How does one determine the distance between two vertices in a graph? In the example below, if we wish to determine the distance between *a* and *d*, we probably look at the graph and, through careful inspection, convince ourselves that it takes at least three steps to get from *a* to *d*.

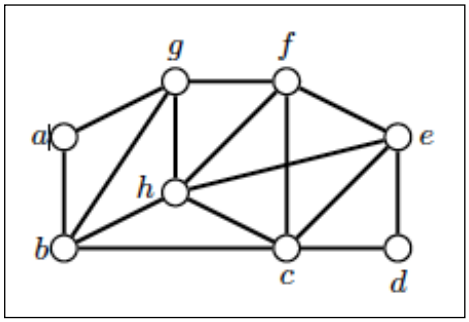

Figure 7: What is the distance between …?

The method of careful inspection works well for small graphs, but for graphs with many vertices this is not practical. For example in the graph in Figure 6, which depicts phone calls made between members of a 400 person group on the island Isla del Sueño off the coast of Florida over a ten day period in 2008, it seems not feasible to find distances between vertices just by inspection. Since in practice many graphs are much larger, a systematic way to determine distances in graphs is needed. We describe a simple method, essentially the so-called breadth first search, to determine all distances from a given vertex.

We demonstrate the method on the graph in Figure 7. Assume that we want to determine the distances from vertex a to all other vertices. The basic idea is to determine first all vertices at distance 1 from a. Then we use these vertices to determine all vertices at distance 2 from a, and these vertices are used to determine all vertices at distance 3 from a and so on.

- *Vertices at distance 0 from a* are easy to determine; a is the only vertex at distance 0 from a.
- *Vertices at distance 1 from a* are the vertices that are adjacent to a. These are vertices b and g.

We record our progress in the graph, by writing next to each vertex its distance from a, if we have determined it already.

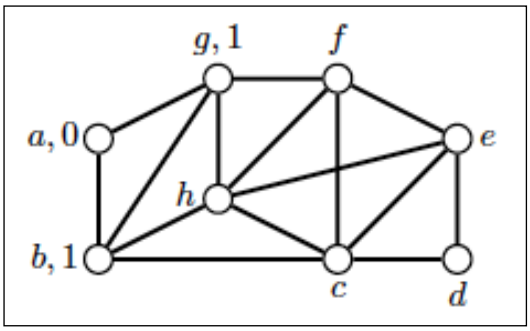

Figure 8: The vertices at distance 0 or 1 from a.

How can we determine vertices at distance 2 from a? The key observation is the following: a shortest path from a to a vertex, call it x, at distance 2 from a has to pass through a vertex at distance 1 from a just before reaching x. This is only possible if x is a neighbour of some vertex at distance 1 from a. But we have determined the vertices at distance 1 from a already. So all we have to do is list all the neighbours of all vertices that we found to have distance 1 from a; each of these vertices has distance 2 from a, except for those that we have already found to have distance 0 or 1 from a.

- *Vertices at distance 2 from a* are the vertices that are adjacent to a vertex at distance 1 from a, i.e., to b or g, but that are not at distance 0 or 1 from a. In our example the vertices adjacent to b are a, g, h and c, and the vertices adjacent to g are a, b, h and f. So the vertices of distance 2 from a are the

vertices in a, b, c, g and h that do not have distance 0 (vertex a) or 1 (vertices b and g) from a, which leaves c, f and h.

Again, let's record our progress in the drawing of the graph.

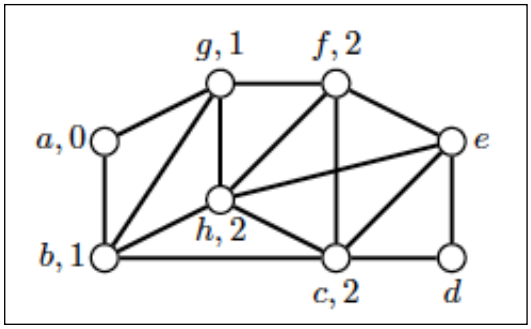

Figure 9: The vertices at distance 0, 1 or 2 from a.

The determination of the vertices at distance 3 from a uses the same idea. The key observation is now that a shortest path from a to a vertex, call it y, at distance 3 from a has to pass through a vertex at distance 2 from a just before reaching y. Hence y is a neighbour of some vertex at distance 2 from a. But we have determined the vertices at distance 2 from a in the last step. So all we have to do is list all the neighbours of all vertices that we found to have distance 2 from a; each of these vertices has distance 3 from a, except for those that we have already found to have distance 0 or 1 or 2 from a.

- *Vertices at distance 3 from a* are the vertices that are adjacent to a vertex at distance 2 from a, i.e., to c, f or h, but that are not at distance 0, 1 or 2 from a. In our example the vertices adjacent to c are b, h, f, e and d, the vertices adjacent to f are g, h, c and e, and the vertices adjacent to h are b, c, e, f and g. So the vertices of distance 3 from a are the vertices among b, c, d, e, f, g and h that do not have distance 0 (vertex a) or 1 (vertices b and g) or 2 (vertices c, f and h) from a, which leaves d and e.

Because there are no further vertices left, we have determined the distances between a and all other vertices. We record our findings in the graph.

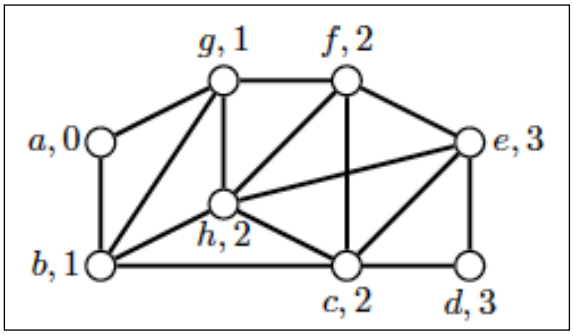

Figure 10: All distances from a determined.

The method here is easy to use for bigger graphs and greater distances. Its advantage is that it can be easily formalised and that it does not require the spotting of paths or

careful inspection. This method can be written out as a proper algorithm or computer programme, which is essential when determining distances in real world graphs with several thousand vertices.

THE SIX DEGREES OF SEPARATION

Origins of the Six Degrees

The author Brian Hayes (2000) discussed the question, "What is the diameter of the world wide web?" and mentioned that it is not 7927 miles (or 12742 km), the diameter of the earth, but that it is estimated to be 19. The diameter in question is of course the diameter of the graph representing the world wide web, whose vertices correspond to web pages, and whose edges correspond to hyperlinks.

It is most remarkable that a graph of such gigantic proportions—it is estimated that there are currently more than 800 million websites on the web, and each is represented by a vertex in the web graph—has such a small diameter. Over the past two or so decades there has been an increasing amount of evidence that many graphs representing real world networks, in particular social networks in which the vertices represent people, have a surprisingly small diameter, and also an increasing understanding of the reasons behind it.

Probably the first observation of a small diameter of a large graph associated with people and their social relations was made in a famous experiment by the sociologist Stanley Milgram in the 1960s. Envelopes addressed to an individual in Boston were handed to a number of volunteers in Nebraska and Kansas, and they had to pass them on to someone they thought likely to be closer to the individual in Boston, and who would then do the same until, hopefully, the envelope reached the addressee. The rule was that the envelope had to be handed to the next person, and this had to be someone the current holder of the envelope knew personally. It turned out that a significant number of envelopes reached their target, and on average in just under six steps. From this originated the popular phrase of the six degrees of separation, which was popularised by a theatre play and later also a movie of the same title by John Guare in the 1990s.

It seems a little premature to draw the conclusion from this experiment that between any two individuals in the global acquaintance graph there is a path of length at least six. The number six is close to the average of the steps taken by each letter, not the maximum. Also there is no guarantee that the letters always travelled along the best route to the target. And while Kansas and Nebraska may seem very far away from Boston, there are certainly more remote corners on our globe. Finally, the number of envelopes that never reached their targets were small, but not insignificant. However, the experiment certainly points towards the fact that individuals, even if they seem geographically or socially rather distant, are linked by remarkably short chains of acquaintanceship. Although there have been objections to these conclusions within sociology, they seem to have been widely accepted as essentially valid.

The Six Degrees in Graph Theory

Define the acquaintance graph to be the graph in which there is a vertex representing each person, with two vertices being adjacent if their persons know each other. Then the statement that every two persons are linked to each other through at most six acquaintances can be restated as:

The diameter of the acquaintance graph is not more than 6.

How can one check such a statement about a graph that is not explicitly given since we don't know for every two people if they are acquainted or not? The general approach is to examine a small and manageable part of the graph, and then extrapolate. For this we need two further notions. The first is the *degree of a vertex*.

Definition: *Let v be a vertex of a graph. The degree of v is the number of vertices v is linked to by an edge*.

For example vertex *a* in Figure 7 has degree 2, while vertex *b* has degree 4. So the degree of a vertex in the acquaintance graph is just the number of acquaintances of the person represented by this vertex. Surveys in the US at the time revealed that most people have close to 1000 acquaintances, so that is a rough approximation of the degrees of the vertices of our acquaintance graph.

The second notion required is that of a *random graph*. This notion was introduced by Paul Erdös and Alfréd Rényi in the 1960s, and it has become a concept of central importance within graph theory. Described in a rather simplistic manner, it examines graphs that are chosen at random from the set of all graphs, or from the set of all graphs with certain properties.

One of the remarkable findings of the research on random graphs has been the fact that many statements hold for almost all graphs, let's say for more than 99% of all graphs, or for almost no graph, say for less than 1% of all graphs with a given number of vertices, depending on the degrees of the vertices on average, and this distinction is getting more pronounced the more vertices our graphs have. The reasoning four our acquaintance graph would then be as follows:

- The acquaintance graph has approximately 6 billion vertices, and the vertices have, on average, degree about 1000.
- The theory of random graphs has shown that over 99% of all graphs with 6 billion vertices whose degrees are about 1000 have diameter not more than 6.
- Hence we conclude that it is very likely that the acquaintance graph has diameter not more than 6.

In order to understand the reasoning better, a closer look at the theory of random graphs is required. Consider all graphs on, say, 100 vertices, and denote these vertices by *a*, *b*, ... , *z*.

Now focus on the two vertices, say *a* and *b*. In some graphs they are joined by an edge, in others not. Since we can group all graphs with vertices *a*, *b*, ... , *z* into pairs of graphs that are identical except that in one graph edge *ab* is present and in the other graph it is not present (see Figure 11 for a smaller example with only eight vertices), we conclude that exactly half of these graphs contain the edge *ab*. The same holds for all other edges, so for every two vertices, in exactly half of all graphs these two vertices are joined by an edge, and in (the other) half of all graphs these vertices are not joined by an edge. That means that, if we choose a graph randomly from all graphs with vertices *a*, *b*, ... , *z*, where each graph is equally likely to be chosen, then any two vertices in the graph are joined by an edge with a 50% probability.

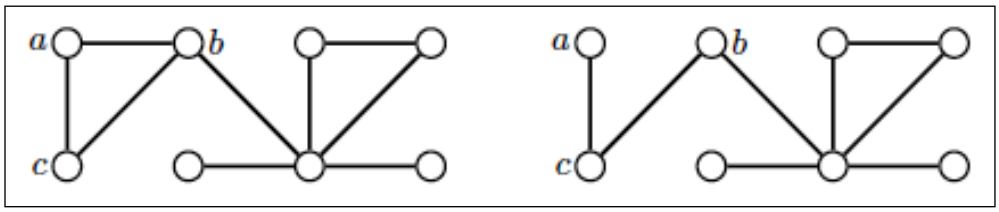

Figure 11: For each graph with edge *ab*, there is one without *ab*.

This in turn means that a random graph can be generated by a simple method: Run through all pairs of vertices, *ab*, *ac*, *ad*, ..., *yz* and for each pair flip a coin, with an edge being inserted if heads comes up, and no edge if tails comes up. This simple trick makes it possible to analyse random graphs. We make use of the trick to determine the likely value of the diameter of our random graph.

Consider the distance between two vertices, say *a* and *b*, in our random graph on twenty-six vertices. There is a 50% probability that *a* and *b* are joined by an edge because when the coin is flipped to determine if there is an edge joining *a* and *b*, head and tails could come up with a 50% chance for each. So the probability that the distance between *a* and *b* equals 1 is 50%.

What is the probability that it equals 2? For this to be the case, some vertex has to be joined to both, *a* and *b*. In Figure 11, *c* is such a vertex. What is the probability that *c* is joined to *a* and to *b*? Each of the two edges, *ac* and *bc*, is present with a 50% probability, and since the two coin flips to determine whether these edges are present are made independently, the probability that both edges are present is 0.5×0.5 which is 25%. Now for the distance between *a* and *b* to be 2, it is not necessary that it is vertex *c* that is joined to both, *a* and *b*. Any other vertex, *d*, *e*, *f*, ... , or *z* would do just as well. So what is the probability that there is a (or possibly more than one) vertex that is joined to *a* and *b*? For each of these vertices, the probability that it is joined to *a* and to *b* is 25%, so the probability for it not to be joined to both, *a* and *b*, is 75%. That applies to each of the vertices *c*, *d*, ..., *z*, so the probability that none of them is joined to both, *a* and *b*, equals

$$0.75 \times 0.75 \times \ldots \times 0.75 = 0.75^{98} \approx 0.00000000000057 .$$

So in almost 100% of all graphs there is a vertex that is joined to *a* and *b*. Hence, for 99.999% of the graphs, the distance between *a* and *b* is either 1 or 2 (depending on whether there is an edge between *a* and *b*), and only in less than 0.00000000000029% of the graphs the distance between *a* and *b* is greater than 2.

To complete the argument, we count the numbers of pairs of vertices, which are $\binom{100}{2} = \frac{100 \times 99}{2} = 4950$ and so on average a graph on 100 vertices has $4950 \times 0.00000000000029 \approx 0.0000000014$ pairs of vertices at distance greater than 2. Hence over 99% of all graphs on 100 vertices have no vertices at distance 3 or more, that means almost all such graphs have diameter 2.

A similar, although somewhat more complicated, argument can be used to analyse the diameter of a graph with 6 billion vertices in which most vertices have degree about 1000. The same model is used, where for every two vertices a coin is flipped to determine if we join them by an edge or not. In order to make sure that most vertices have a degree of about 1000, we use a biased coin in which tails, that is no edge, is far more likely than heads, which means an edge. A classical result of the theory of random graphs states that almost all graphs with *n* vertices whose vertices have, on average, a degree of *d*, have a diameter of approximately

$$\text{constant} \times \frac{\log(n)}{\log(d)}$$

provided $d > \log(n)$, where $\log(n)$ stands for the natural logarithm of *n*. Keeping in mind that $\log(n)$ is much smaller than *n*, a good enough approximation of $\log(n)$ is the number of digits of *n*, this result says that almost all graphs have a very small diameter relative to the number of vertices. For more details about random graphs we refer to the comprehensive text by Bollobás (2001), or to the gentle introduction by Harary & Palmer (1973).

The Six Degrees and the power law

Over the past decades, with the advent of electronic communication, it has become possible to observe communication and social networks much more closely than before. Telephone and cell phone networks are more easily observed, and social media such as Facebook provide valuable data.

It has become apparent that in many instances a random graph in the form described above is not the best model for many real world networks, such as the acquaintance graph. One problem being that random graphs do not satisfy the so-called power law. A few examples will demonstrate what is meant by power law.

Theorem: *(Lotka's Law, 1926) For* $k \in \mathbb{N}$ *let* $A(k)$ *denote the number of authors who published k scientific articles. Then* $A(k) \approx \text{constant} \times \frac{1}{k^2}$.

To illustrate Lotka's Law consider an example. Assume that, say, $A(1) = 1000$. So 1000 authors published exactly 1 scientific article. Then the approximate number of authors who published two, three or more articles is as given in the table below.

$A(1)$	$A(2)$	$A(3)$	$A(4)$	$A(5)$	...
1000	$\frac{1000}{4} = 250$	$\frac{1000}{9} = 111$	$\frac{1000}{16} = 64$	$\frac{1000}{25} = 40$	...

We say that $A(k)$ follows a power law with exponent 2. This is visualised as in Figure 12. It is immediate, and typical for distributions that satisfy a power-law, that many authors published one article, fewer published two articles, even fewer published three articles and so on. The important property that makes this a power law distribution is that the number $A(k)$ decreases like the inverse of a polynomial in k, $\frac{1}{k^2}$ in this case, and not exponentially.

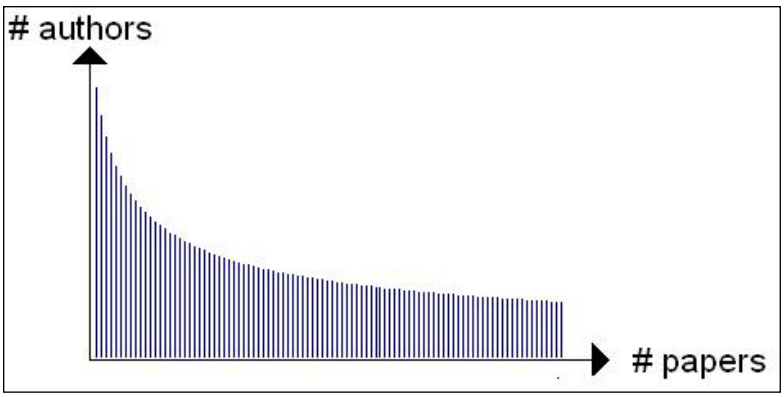

Figure 12: Number of authors who published k scientific papers.

We give a few more examples of distributions that satisfy the power-law.

Theorem: *(Zipf's Law, 1952) Suppose all English words are listed in order of frequency of usage, w_1 being the most common word, w_2 the second most common word and so on. Let $W(k)$ equal the average number of occurrences of w_k in 100 words of standard text. Then $W(k)$ follows a power law with exponent 1, i.e.,*

$$W(k) \approx \text{constant} \times \frac{1}{k}.$$

Zipf's Law has been observed to hold not only for English, but for all human languages, and even for some programming languages.

Theorem: (Awerbach 1913) *City sizes follow a power law.*

Over the past decades it has transpired that in a large number of real world networks the vertex degrees follow a power law distribution. We define what exactly is meant by that.

Definition: *Let G be a (typically large) graph. For* $k \in \mathbb{N}$ *let* $Deg(k)$ *= number of vertices of degree k. If* $Deg(k)$ *follows a power law, then we say that G is a power law graph.*

A few examples of power law graphs and their exponents are listed in Figure 13.

Year	Network	Number of vertices	d	exponent
	Social:			
1999	phone calls	47 000 000	3.16	2.1
2002	emails	59 912	1.44	1.5
1998	film actors	449.913	3.48	2.3
	Information:			
1999	www.nd.edu	269.504	5.55	2.1
2005	world wide web	53 000 000 000		2.1
2002	word co-occurrences	460 902	70.1	2.7
1998	citation network	783.339	8.57	3.0
	Biological:			
2000	metabolic network	765	9.64	2.2
2001	protein interaction	2 115	2.12	2.4

Figure 13: Examples for power law graphs (d denotes the average vertex degree).

The most typical example of a power law graph is the world wide web, WWW. (It corresponds to a directed graph because the edges, i.e., the hyperlinks, have a direction, but we ignore this fact). In the WWW the important pages are usually those that have a large number of pages pointing towards them, like the Google page in the picture of a tiny section of the WWW in Figure 14. As the WWW grows, new pages are created, and they create links to existing pages. However, and this is the difference between random graphs and typical power law graphs, they do not create links to pages randomly, but it is more likely that a new page creates a link to an important page than to an unimportant page.

See for example the section of the world wide web in Figure 14 where every page has a link to Google. This is called preferential attachment. A result of preferential attachment is a phenomenon observed in real world power law graphs: there is a small number of vertices of large degree which allow for many short connections. For example in an acquaintance graph, there are a small number of individuals who know an unusually large number of people, the “big players”, and they allow for many short connections. So power law graphs seem to provide a good model for networks such as the acquaintance graph.

What does this mean for the six degrees of separation? The following standard result in the literature on random power laws provides the answer.

Theorem: *Of all power law graphs with n vertices and average degree d, almost all have a diameter of approximately* $\text{constant}_d \times \log(\log(n))$*, where the constant depends on d, but not on n.*

Hence the diameter of power law graphs is generally extremely small. If one imagines the logarithm of n as the number of digits of n, then $\log(\log(n))$, the logarithm of the logarithm of n, is approximately the number of digits of the number of digits of n. So for 10^{100} this would yield the number of digits of 101, which is 3. So power law graphs have a diameter that is very small relative to their number of vertices. And that applies also to power law graphs such as the world wide web whose current number of pages is estimated to be about 800 million and whose diameter is estimated as 19 as mentioned at the beginning of this section, or to the acquaintance graph. The conclusion is: while mathematics cannot guarantee that its diameter is 6, it is likely that it is a small number, not too far off 6.

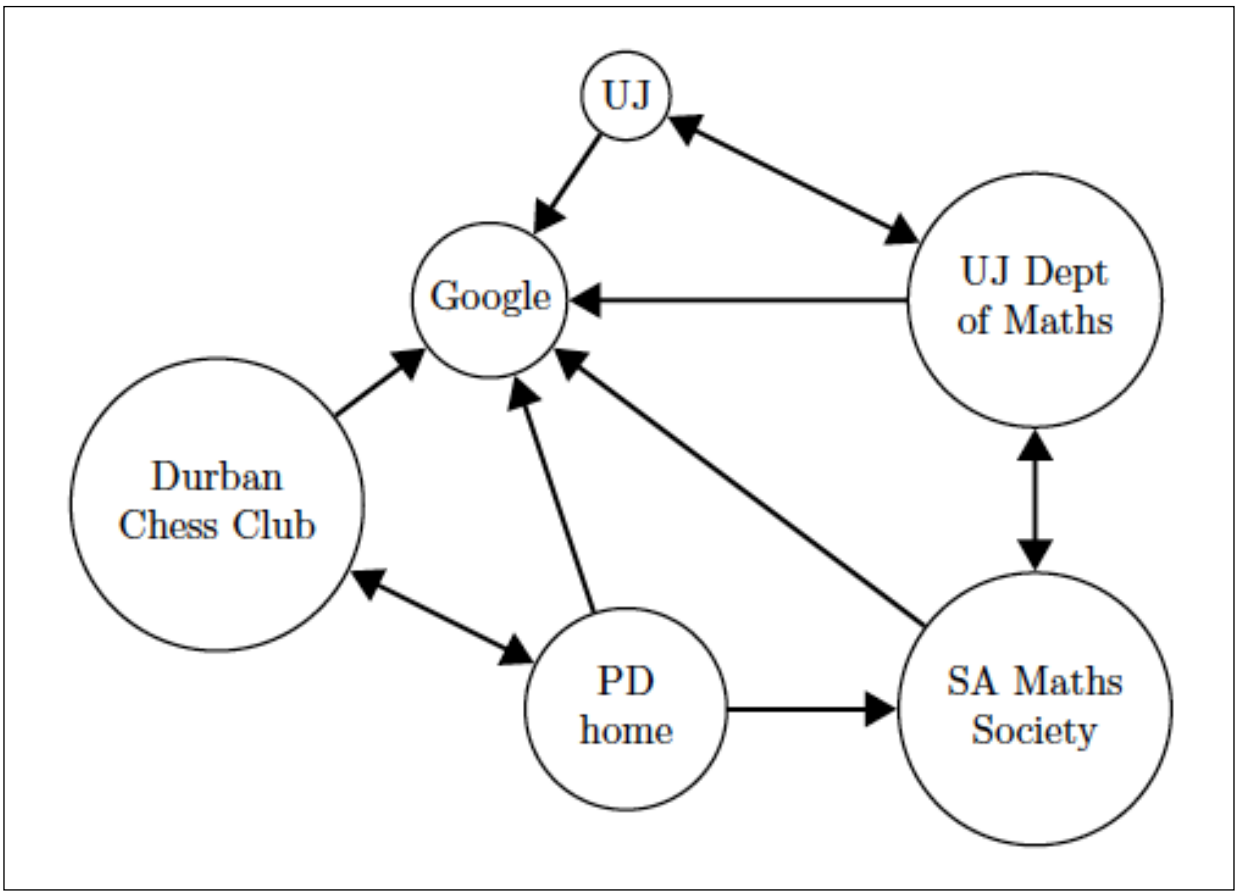

Figure 14: A tiny section of the world wide web.

GRAPH THEORY IN SCHOOLS?

We hope that the preceding sections demonstrated that graph theory has relevant and interesting applications. It has also many characteristics that make it a great subject to be taught at schools, within mathematics.

- Graph theory has more visual impact than much of the more traditional mathematics. A graph can be drawn and pictured. For example manipulations of graphs can visually be demonstrated and observed.
- Students that have fallen behind in more traditional mathematics may find out that they enjoy and understand graph theory much more easily. When lecturing mathematics courses with a significant graph theory content to science and engineering students, I often saw students who did fairly well in graph theory, while struggling with, for example, calculus and linear algebra.
- Graph theory could help give students more confidence in mathematics, and possibly also help get struggling students back into mathematics.
- Graph theory has all the rigour of traditional mathematics, so in a more advanced course it helps develop the ability to follow logical chains of arguments.
- The relevance of graph theory to technology and everyday life, for example computer networks, is more apparent than in much of the traditional mathematics.

Examples for topics in graph theory that could be taught, and partly are taught in some schools, are the following:

- Minimum spanning trees
- Distance between vertices
- Euler tours
- Matrix multiplication and walks
- Trees
- Graph theory as an analytical tool (critical path method and others).

REFERENCES

Bollobás, B. (2001). *Random Graphs*. Cambridge: Cambridge University Press.

Harary, F. & Palmer, E. M. (1973). *Graphical Enumeration*. Michigan: Michigan University Press.

Hayes, B. (2000). Graph Theory in Practice: Part I. *American Scientist* 88(1), 9-13.